OUTDOOR SERPENTINE

burner with pilot safety system

Model SRP-N(P)

OWNER'S OPERATION AND INSTALLATION MANUAL

We recommend that our products be installed and serviced by professionals who are certified in the U.S. by NFI (National Fireplace Institute).

Tested & Listed By O-T L Portland Oregon USA

OMNI-Test Laboratories, Inc.

Report # 401-O-07-5

Complies with ANS Z21.97.CSA 2.41-2012 "Outdoor Decorative Gas Appliances", CGA 2.17-M91(R2009) "Gas Fired Appliances for Use at High Altitudes"

DANGER

If you smell gas:

1. **Shut off gas to appliance.**
2. **Extinguish any open flame.**
3. **If odor continues, keep away from the appliance and immediately call your gas supplier or fire department.**

WARNING

Improper installation, adjustment, alteration, service or maintenance can cause injury or property damage. Read the instalation, operating and maintenance instructions thoroughly before installing or servicing this equipment.

WARNING

Do not store or use gasoline or other flammable vapors and liquids in the vicinity of this or any other aplliance.

An LP-cylinder not connected for use shall not be stored in the vicinity of this or any other aplliance.

DANGER

CARBON MONOXIDE HAZARD

This appliance can produce carbon monoxide which has no odor. Using it in an enclosed space can kill you. Never use this appliance in an enclosed space such as a camper, tent, car or home.

WARNING: For Outdoor Use Only

INSTALLER: Leave this manual with the appliance. CONSUMER: Retain this manual for future reference.

Version française de ce manuel est disponible à partir du site WEB : www.woodbridgefp.com

French version of this Owners Manual is available at www.woodbridgefp.com

SAFETY INFORMATION

WARNINGS

IMPORTANT: The appliance should be inspected before use and at least annually by a quilified service person. More frequent cleaning may be required as necessary. It is imperative that the control compartment, burners and circulating air passageways of the appliance be kept clean.

⚠ DANGER: Carbon monoxide poisoning may lead to death!

Carbon Monoxide Poisoning: Early signs of carbon monoxide poisoning resemble the flu, with headaches, dizziness, or nausea. If you have these signs, the burner may not be working properly.
Get fresh air at once! Have the burner serviced. Some people are more affected by carbon monoxide than others. These include pregnant women, people with heart or lung disease or anemia, those under the influence of alcohol, and those at high altitudes.

Natural Gas: Natural gas is odorless. An odor making agent is added to the gas. The odor helps you detect a gas leak. However, the odor added to the gas can fade. Gas may be present even though no odor exists.
Make certain you read and understand all warnings. Keep this manual for reference. It is your guide to safe and proper operation of this appliance.

⚠ WARNING: Any change to this appliance or its controls can be dangerous.

1. This appliance, as supplied, is only for use with the type of gas indicated on the rating plate.
2. When an appliance is for connection to a fixed piping system, the installation must conform with local codes, or in the absence of local codes with the *National Fuel Gas Code, ANSI Z223.1/NFPA 54, or International Fuel Gas Code, Natural Gas and Propane Installation Code, CSA B149.1, or Propane Storage and Handling Code, B149.2, as applicable.*
3. Keep the appliance area clear and free from combustible materials, gasoline and other flammable vapors and liquids.
4. Do not burn solid fuel in the fireplace after installing the appliance. Do not use this appliance to cook food or burn paper or other objects.
5. **Children and adults should be alerted to the hazards of high surface temperatures and should stay away to avoid burns or clothing ignition.**
6. **Clothing or other flammable materials should not be hung from the appliance, or placed on or near the appliance.**
7. **Young children should be carefully supervised when they are in the area of the appliance.**
8. The appliance, when installed, must be electrically grounded in accordance with local codes or, in the absence of local codes, with the *National Electrical Code, ANSI/NFPA 70 or the Canadian Electrical Code, CSA C22.1,* if applicable.
9. **Do not use appliance if any part has been under water. Immediately call a qualified service technician to inspect the room appliance and to replace any part of the control system and any gas control which has been under water.**
10. Inspect the burner before each use of Outdoor Fire Pit.
The burner must be replaced prior to the appliance being put into operation if it is evident that the burner is damaged. Please refer to *"Illustrated parts List"* for the replacement burner part number.
11. Turn the appliance off and let cool before servicing, installing, or repairing. **Any guard or other protective device removed for servicing the appliance must be replaced prior to operating the appliance.** Only a qualified service person should install, service, or repair appliance.

HIGH ALTITUDE INSTALLATIONS:

The appliance is rated for installations up to 4500' (1372 m) above sea level. Above 4500' the appliance must be de- rated at the factory for the appropriate altitude.

LOCAL CODES

Install and use Outdoor Fire Pit with care. Follow local codes. In the absence of local codes, use the latest edition of *The National Fuel Gas Code ANSI Z223.1/NFPA 54* available from:

* American National Standards Institute, Inc., 1430 Broadway, New York, NY 10018
* National Fire Protection Association, Inc., Batterymarch Park, Quincy, MA 02269.

PRODUCT ASSEMBLY

WARNING: Failure to position the parts in accordance with these diagrams or failure to use only parts specially approved with this appliance may result in property damage or personal injury.

1. Remove Burner Assembly, and Burner Media from packaging (see **Parts List,** *page 14*)
2. Install the Burner Assembly inside of a non-combustible enclosure custom built accordanly to clearance requirements.
3. Connect the Burner Assembly to gas supply using supplied flex connector and shutoff valve.
4. Evenly fill the media compartment with burner media (broken tempered glass) fully covering the burner as shown on a picture.

   If you are NOT planning to add optional topping media, then fill the media compartment in full and proceed to the step 5.

5. Place and evenly distribute topping media (optional lava rock, black glass or stones) on top of burner media as shown.

6. Carefully leak test all connections following the procedure on Page 6.

   Never light the appliance without having the clear glass media completely covering the burner!

7. Having free access to the valve light the appliance following the procedure on Page 8.

Make sure the flame is even along the burner and appliance is fully operational and safe for use. Turn OFF the appliance and let it cool.

8. To access the gas components and listing labels remove complete burner assembly from its enclosure.

ATTENTION: 110V AC / 7V DC power adapter supplied with the unit must be plugged into an outdoor approved enclosed electrical box.

INSTALLATION

CAUTION: Do not remove the metal data plates attached to the Burner. These plates contain important information.

NOTICE: Installation and repair should be done by a qualified service person. The appliance should be inspected before use and at least annually by a qualified service person. More frequent cleaning may be required as necessary. It is imperative that control compartment, burner and circulating air passageways of the appliance be kept clean.

CLEARANCES TO COMBUSTIBLE MATERIALS:

- Top …… 60” (152.4 cm)
- Sides ……..… 16” (40.6 cm)
- Floor ..... 2” (5.1 cm)

FUEL PRESSURE SPECIFICATION:

- Inlet Natural Gas (NG) Min …… 5.0” W.C.
  Max ..... 10.5” W.C.
- Inlet Propane (LP) Min …… 11.0” W.C.
  Max ..... 13.0” W.C.

- Manifold Natural Gas (NG) ..... 3.5” W.C.
- Manifold Propane (LP) ..... 10.0” W.C.

LOCATING YOUR GAS FIREPLACE

1) When selecting a location for your fireplace, ensure that the clearances are met.

2) This appliance must be installed in an open-air situation with natural ventilation, without stagnant areas, where gas leakage and products of combustion are rapidly dispersed by wind and natural convection.

3) Certain materials or items, when placed under or near the appliance, will be subjected to radiant heat and could become damaged.

4) Typically an outdoor space is not enclosed but, any enclosure in which the appliance is used shall comply with one of the following:

An enclosure with walls on all sides, but at least one permanent opening at ground level and no overhead cover.

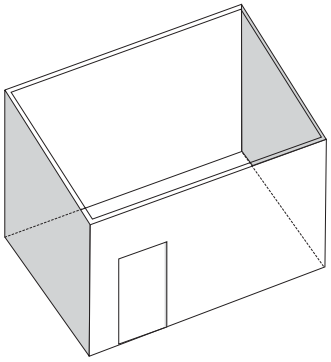

Within a partial enclosure that includes an overhead cover and no more that two walls.

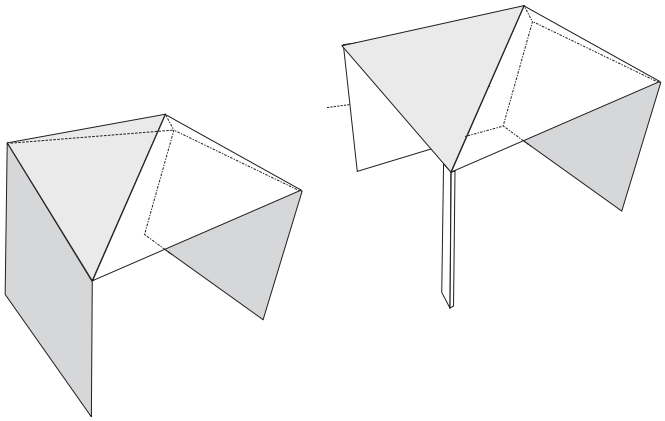

Within a partial enclosure that includes an overhead cover and more than two walls, the following shall apply:

- At least 25% of the total wall area is completely open, and
- At least 30% of the remaining wall area is open and unrestricted

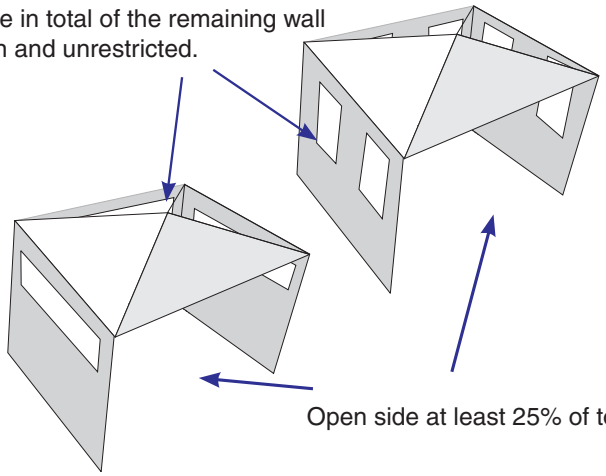

NOTES

SERPENTINE FIREPLACE STANDARD ENCLOSURE

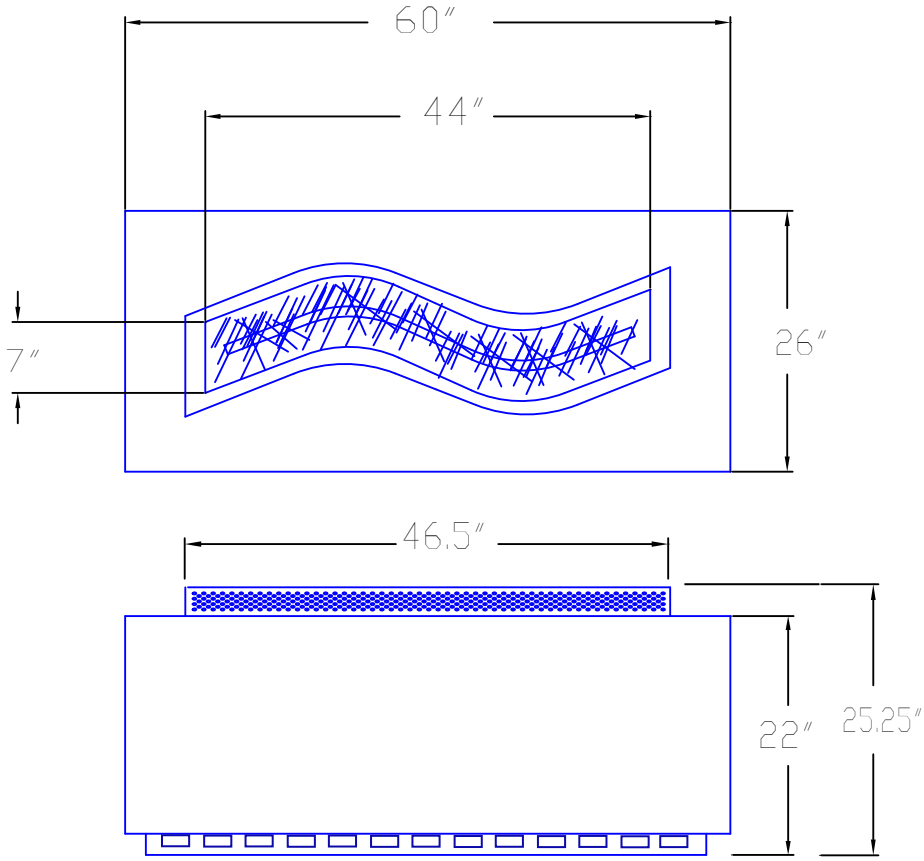

ACCESSING FIREPLACE CONTROLS AND CERTIFICATION TAGS

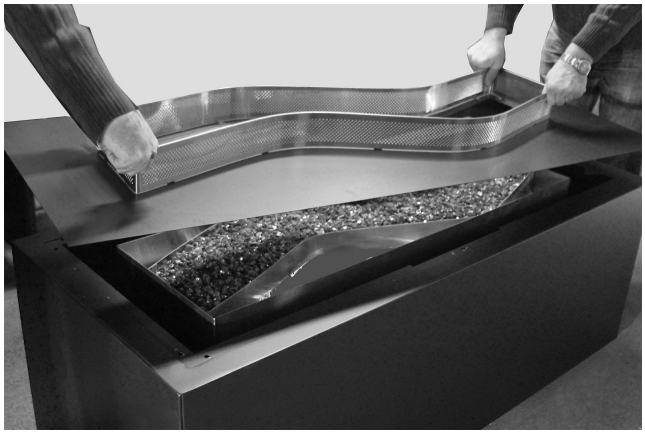

Lift cover off the base and set aside, providing access to the wiring harness, remote receiver, battery pack, certification tags, and gas connections (if applicable).

CONNECTING TO GAS SUPPLY

⚠ **WARNING: A qualified service person must connect appliance to gas supply. Follow all local codes.**

Installation Items Needed

Before installing the Outdoor Burner, make sure you have all items listed bellow:

- piping (check local codes)
- sealant
- manual shutoff valve
- adjustable (crescent) wrench or pliers
- sediment trap
- tee joints
- pipe wrench

⚠ **CAUTION: Use only new, black iron or steel pipe. Internally tinned copper tubing may be used in certain areas. Use pipe of 1/2" diameter or greater to allow proper gas volume to the Burner.**
If pipe is too small, undue loss of pressure will occur.

Installation must include a manual shutoff valve, union, and plugged 1/8" NPT tap. Locate NPT tap within reach for test gauge hook up. NPT tap must be upstream from the appliance.
Apply pipe joint sealant lightly to male threads. This will prevent excess sealant from going into pipe. Excess sealant in pipe could result in a clogged burner injector.

Install sediment trap in supply line as shown below. Locate sediment trap where it is within reach for cleaning and trapped matter is not likely to freeze. A sediment trap traps moisture and contaminants. This keeps them from going into Outdoor Burner controls.
If sediment trap is not installed or is installed wrong, unit may not run properly.

CHECKING GAS CONNECTION

⚠ **WARNING: Test all gas piping and connections for leaks after installing or servicing. Correct all leaks at once.**

⚠ **WARNING: Never use an open flame to check for a leak. Apply a mixture of liquid soap and water on all joints. Bubbles forming show a leak. Correct all leaks at once.**

Test Pressures in Excess Of 1/2 psi (3.5 kPa)

The appliance and its individual shutoff valve must be disconnected from the gas supply piping system during any pressure testing of that system at test pressures in excess of ½ psi (3.5 kPa).

Test Pressures Equal To or Less Than 1/2 psi (3.5 kPa)

The appliance must be isolated from the gas supply piping system by closing its individual manual shutoff valve during any pressure testing of the gas supply piping system at test pressures equal to or less than ½ psi (3.5 kPa).

IMPORTANT

This appliance is not designed for use with a non-disposable, self-contained LP-gas supply system! Do not use a gas hose to connect the appliance to any gas supply. Use approved Flexible Gas Connectors.

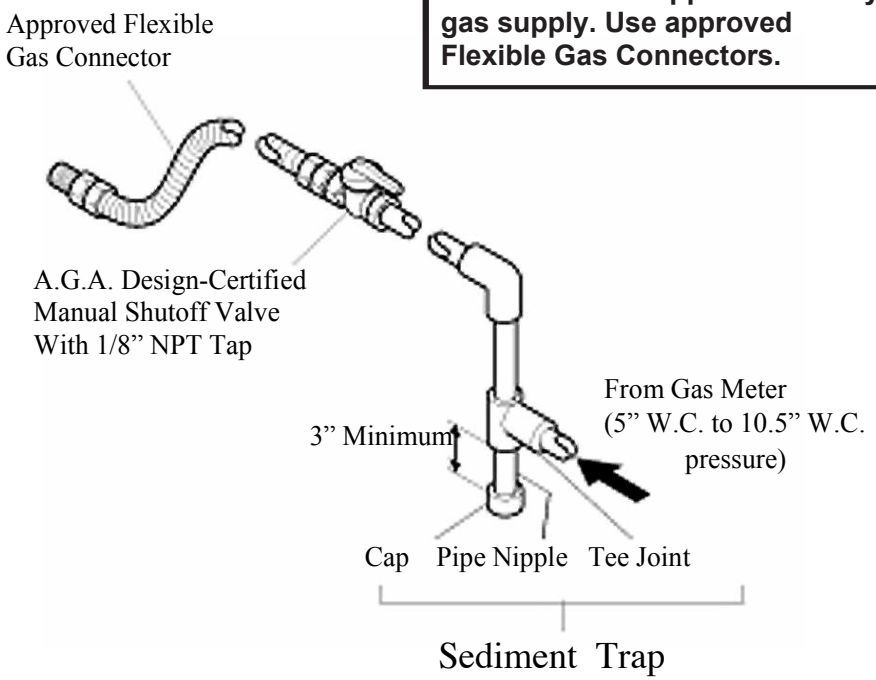

OUTDOOR SERPENTINE

BURNER

DIMENSIONS

TOP VIEW

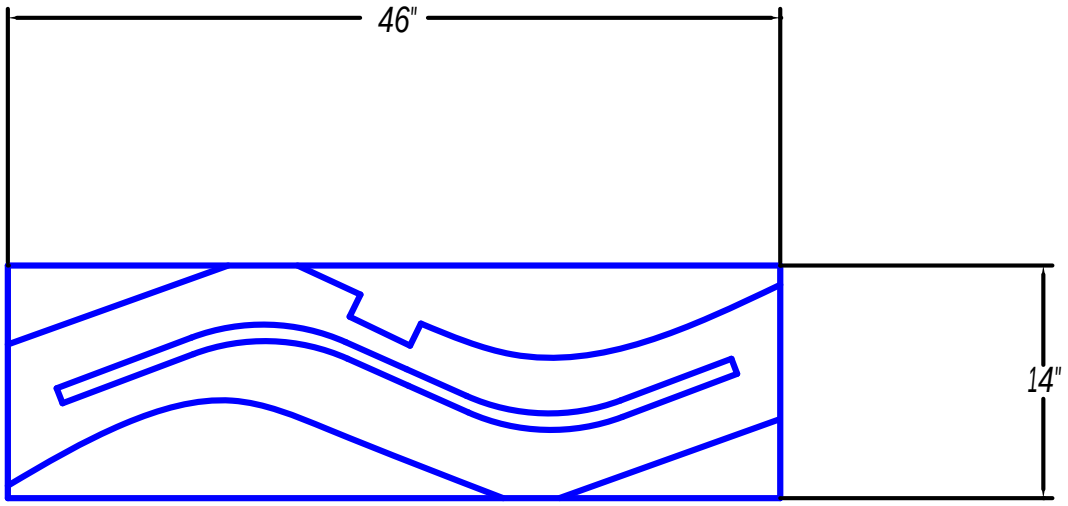

SIDE VIEW

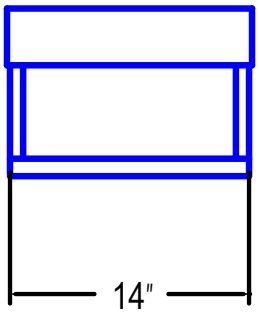

FRONT VIEW

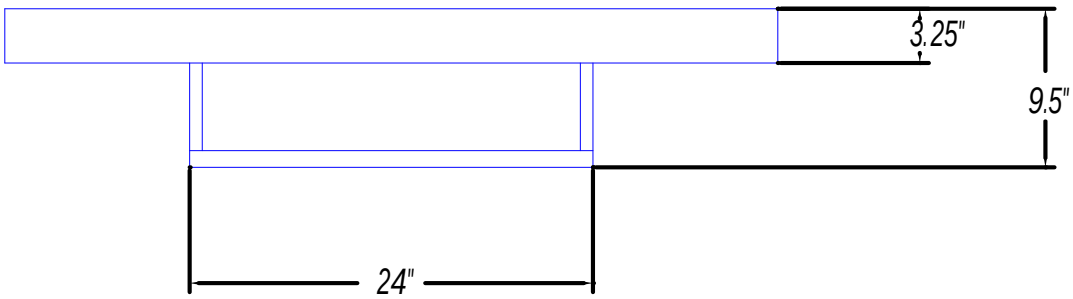

Specifications:

MODEL #	GAS TYPE	INPUT RATE (BTU/h)	ORIFICE SIZE	BURNER PORTS	PORT SIZE
SRP - N	NATURAL	80,000	#10	45	1/8"
SRP - P	PROPANE	80,000	#35	45	1/8"

FOR YOUR SAFETY READ BEFORE OPERATING

WARNING

If you do not follow these instruction exactly, a fire or explosion may result causing property damage, personal injury or loss of life.

A. This appliance is equipped with an ignition device which automatically lights the pilot. Do not try to light the pilot by hand.

B. BEFORE OPERATING smell all around the appliance area for gas. Be sure to smell next to the floor because some gas is heavier than air and will settle on the floor.

WHAT TO DO IF YOU SMELL GAS:

- Do not try to light any appliance.
- Do not touch any electric switch; do not use any phone in your building.
- Immediately call your gas supplier from a neighbor's phone.
  Follow the gas supplier's instructions.
- If you cannot reach your gas supplier, call the fire department.

C. Main gas valve in this appliance is not serviceable and does not have any control knobs or switches to operate. Do not remove heat shields covering the valve and electronic devices; do not try to repair or modify the valve as it may result in a fire or explosion. Call a qualified service technician if you have any safety concerns.

D. Do not use this appliance if any part of it has been under water. Immediately call a qualified service technician to inspect the appliance and to replace any part of the control system and any gas control that has been under water.

LIGHTING FOR THE FIRST TIME

DANGER

Never use an open flame to check for gas leak.

LEAK TESTING

1. Follow the pipe from the gas supply line connection to the gas valve. Check connection for leaks with soap and water mixture.
2. Next check for gas leaks at the burner with soap and water mixture.
3. Check the pilot for gas leaks with soap and water mixture.

LIGHTING FOR THE FIRST TIME

APPROVED LEAK TESTING METHOD

You may check for gas leaks with the following methods only:

- Soap and water solution
- An approved leak testing spray
- Electronic sniffer

WARNING

If using a soap and water solution to test for leaks, DO NOT spray solution onto electronic parts.

DANGER

Never use an open flame to check for gas leak.

NOTE: Remove any excessive pipe compound from the connections. Excessive pipe compound can set off electronic sniffers.

Check for gas leaks in each of the following locations:

- Pipe from the gas supply line connection to the gas valve
- Burner connections, pilot
- All joints on valve and control body
- Field made joints / gas shutoff valve
- Factory made joints, each joint and connection

OPERATING INSTRUCTIONS

1. **STOP! Read the safety information on previous page.**
2. Turn off all electric power to the appliance.
3. Do not attempt to light the pilot by hand.
4. Remove an access cover from the appliance *(if applicable).*
5. Turn the gas control manual valve to the full OFF position.
6. Wait five (5) minutes to clear out any gas. Then smell for gas, including near the floor.

   If you smell gas, STOP! Follow "B" in the safety information (see page 7).

   If you don't smell gas, go to the next step.
7. Turn the gas control manual valve to the ON position.

Manual Shutoff Valve
in "ON" position

8. Plug supplied 7V DC adapter into 110V power outlet.
9. Connect the wire to the DC input plug at the unit.

OPERATING INSTRUCTIONS (continued)

10. Locate Remote Receiver inside of the unit *(see Illustrated Parts List, page 13).* Make sure that the slider switch of the Receiver is in "REMOTE"

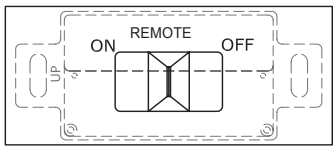

11. Replace an access door *(if applicable)*.
12. Read and follow instructions in how to set up and to use remote control described in supplied "INSTALLATION AND OPERATING INSTRUCTIONS FOR SKYTECH MODEL: 1001 T/LCD-A"".
13. If the appliance will not operate, follow the instructions "To Turn Off Gas To Appliance" and call your service technician or gas supplier.

TO TURN OFF GAS TO APPLIANCE

1. Turn off all electric power to the appliance if service is to be performed. Unplug 7V DC adapter from the power outlet.
2. If necessary, remove Access Door from the appliance to access manual shutoff valve on gas line.
3. Turn the gas control manual valve to the full OFF position.

Manual Shutoff Valve
in "OFF" position

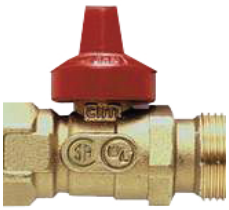

4. If necessary, replace Access Door.

WARNING

Turn off gas before servicing fireplace. It is recommended that a qualified service technician perform these check-ups at the beginning of each heating season.

BURNER, PILOT AND CONTROL COMPARTMENT

Keep the control compartment clean by vacuuming or brushing at least twice a year Make sure the burner porting, pilot air opening and burner air opening are free of obstructions at all times.

Pilot Flame

PILOT FLAME

The flames from the pilot should be visually checked as soon as the unit is installed and periodically during normal operation. **The pilot flame must always be present when the fireplace is in operation or connected to the gas line with main shutoff valve open and the IPS activated (powered).** The pilot flame has two distinct flames, one engulfing the flame sensor and the other reaching to the main burner.

BURNER

Correct Burner Flame

The flame from the burner should be visually checked as soon as the unit is installed and periodically during operation! Keep the appliance and its burner clean by vacuuming or brushing at least twice a year. Make sure the burner porting and burner air openings are free of obstructions at all times.

Inspect area around the burner. Remove any lint or foreign material with a brush or vacuum.

The burner must be replaced prior to the appliance being put into operation if it is evident that the burner is damaged. Please refer to "Illustrated Parts List" for the replacement part number specified by the manufacturer.

⚠ WARNING: Turn off the unit and let cool before servicing. Only a qualified service person should service and repair this appliance.

Note: All troubleshooting items are listed in order of operation.

OBSERVED PROBLEM	POSSIBLE CAUSE	REMEDY
Unit is smoking / sooting excessively (*Note:* It is natural and unavoidable for appliance sets to produce moderate levels of carbon (soot) where flames contact the media. This is especially true	1. Poor fuel quality	1. Contact local natural gas company
	2. Excessive flame impingement or blockage	2. Separate the stones/media to allow more flame passage
	3. Improper fuel/air mixture	3. Remove any foreign items from the flame pattern and/or check for proper orifice sizing
Burner is excessively noisy (*Note:* The movement and combustion of gas will create low, unavoidable levels of noise.)	1. Passage of air/gas across irregular surfaces	1. Relieve any tight bends or kinks in gas supply line
	2. Excessive gas pressure on natural gas units	2. Check/reset gas regulator pressure
Burner flame is too low or too high	1. Incorrect gas supply or pressure	1. Check for proper gas supply pressure
	2. Blocked burner orifice or burner manifold ports	2. Free burner orifice and manifold ports of any burrs, paint, or other blockage
	3. Improper burner orifice size	3. Verify proper burner orifice sizing (see page 7)
Remote does not function	1. Battery is not installed. Battery power is low.	1. Replace batteries in receiver and remote control

OBSERVED PROBLEM	POSSIBLE CAUSE	REMEDY
When ignitor button is pressed, there is spark at pilot but no ignition	1. Gas supply turned off or manual shutoff valve closed 2. Air in gas lines when installed 3. Pilot adjustment screw closed 4. Pilot is clogged 5. Ignitor electrode broken	1. Turn on gas supply or open manual shutoff valve 2. Purge air from the supply line *(see page 8)* 3. Adjust pilot flame for approximately 1" blue flame 4. Clean pilot *(see Cleaning and Maintenance, page 11)* or replace pilot assembly. 5. Replace pilot assembly.
Burner does not light after pilot is lit	1. Burner orifice clogged 2. Inlet gas pressure is too low 3. Burner orifice diameter is too small 4. Flame sensor leads disconnected	1. Clean burner orifice 2. Contact local natural or propane/LP gas company 3. Replace burner orifice 4. Reconnect leads
Delayed ignition burner	1. Pilot flame needs adjusting	1. Adjust pilot flame for approximately 1" blue flame

WARNING: If you smell gas
- **Shut off gas supply.**
- **Do not try to light any appliance.**
- **Do not touch any electrical switch; do not use any phone in your building.**
- **Immediately call your gas supplier from a neighbor's phone. Follow the gas supplier's instructions.**
- **If you cannot reach your gas supplier, call the fire department.**

Unit produces unwanted odors	1. Gas leak. See Warning statement above.	1. Locate and correct all leaks.

IMPORTANT: Operating unit where impurities in air exist may create odors. Cleaning supplies, paint, paint remover, cigarette smoke, cements and glues, new carpet or textiles, etc., create fumes. These fumes may mix with combustion air and create odors. These odors will disappear over time.

Gas odor even when Remote Control is in OFF position	1. Gas leak. **See Warning statement above.** 2. Main gas valve defective	1. Locate and correct all leaks. 2. Replace gas valve

ILLUSTRATED PARTS LIST

FOR PART DESCRIPTION SEE NEXT PAGE

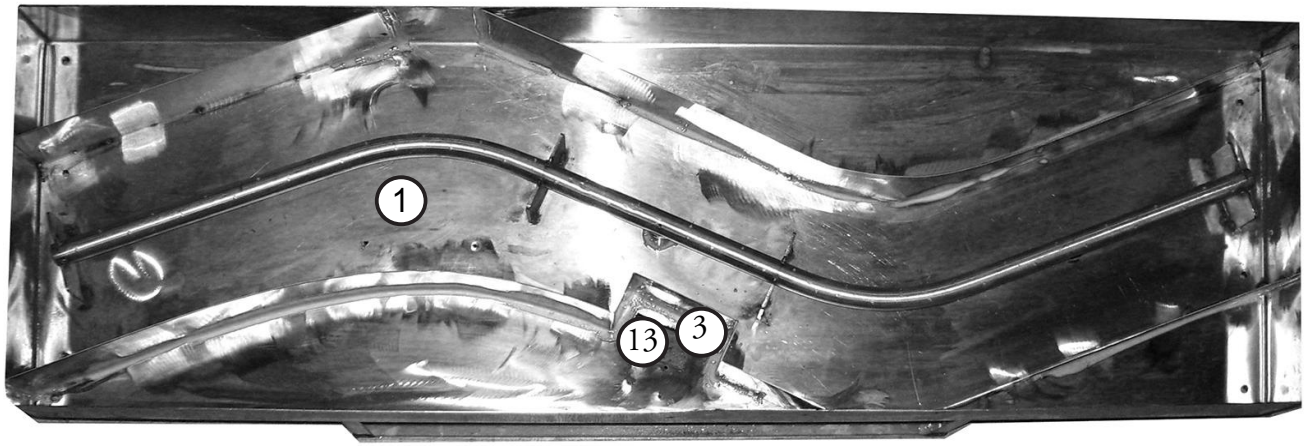

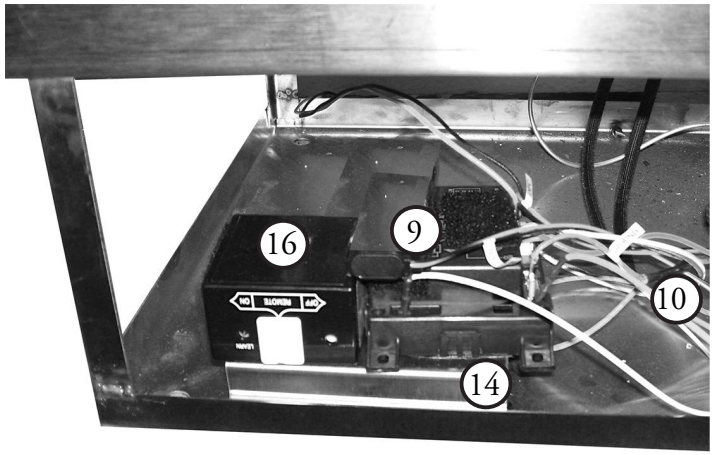

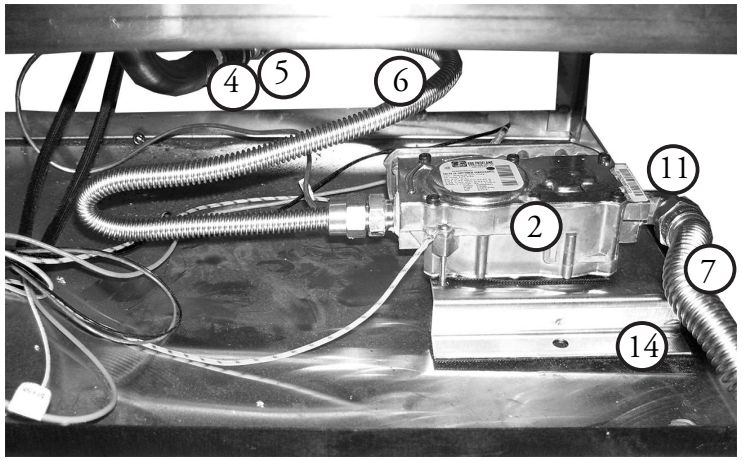

FOR PART DESCRIPTION SEE NEXT PAGE

17 BURNER GLASS MEDIA

18 TOPPING GLASS MEDIA
(optional)

19 OPTIONAL STONES

20 LAVAROCK
(optional)

ProFlame System Configuration

(880 ON/OFF Wiring Diagram)

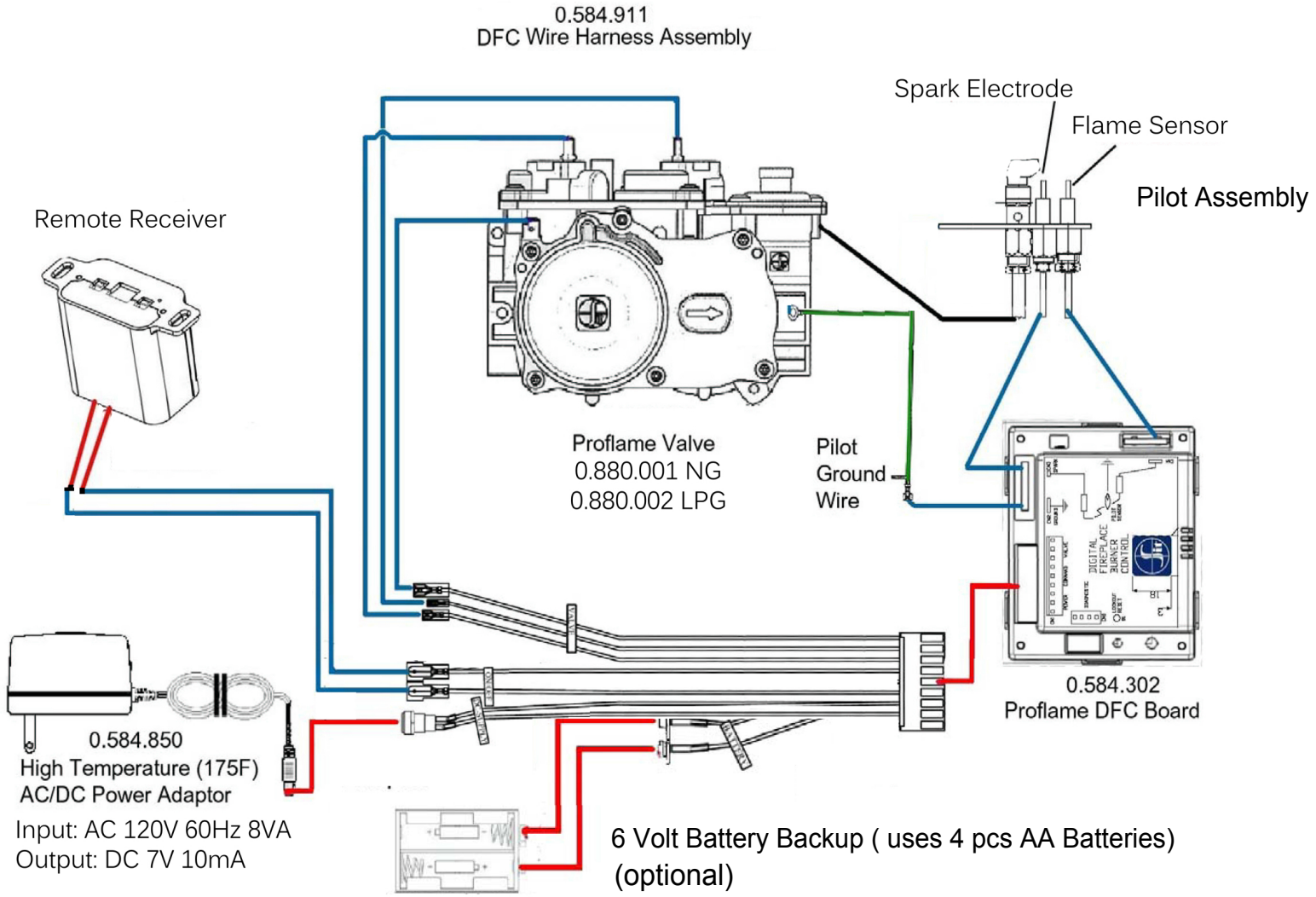

WARNING

Failure to position the parts in accordance with these diagrams or failure to use only parts specifically approved with this appliance may result in property damage or personal injury.

This list contains replaceable parts used in your Serpentine. All replacement parts should be ordered from your retailer or from Woodbridge Fireplace Inc. at 1-905-799-5953 or on-line at www.woodbridgefp.com

Item	Description	QTY	SRP-N Natural	SRP-P Propane
1	Burner Assembly	1	W600010	W600010
2	Main Gas Valve	1	R100026	R100027
3	Pilot Assembly	1	R100028-SS	R100028-SS
4	Reducer Bushing	1	H100007	N/A
5	Orifice	1	F200011	F200013
6	Orifice Flex Connector	1	C100009	C100009
7	Gas Supply Flex Connector	1	C100080	C100080
8	Shutoff Valve	1	D300090	D300090
9	DFC Control Board	1	H100142	H100142
10	DFC Wire Harness	1	H100141	H100141
11	90 deg. brass elbow	1	C100083	C100083
12	7V 10mA DC adapter	1	H100140	H100140
13	Pilot Shield	1	D400267	D400267
14	Mount Bracket	2	F200022-SS	F200022-SS
15	Skytech Remote Control	1	PCB	PCB
16	Skytech Remote Receiver	1	PCB-R	PCB-R
17	Burner Clear Media	1	G100048	G100048
	OPTIONAL TOPPING MEDIA:			
18	Black Glass	1	G100032	G100032
19	Small Basalt Stones	1	G100049	G100049
20	Lava Rock	1	G100049	G100049

NOTES

NOTES

WARRANTY INFORMATION

KEEP THIS FOR WARRANTY

Model _____

Serial No. _____

Date Purchased _____

Always specify model and serial numbers when communicating with the factory.

LIMITED LIFETIME WARRANTY

The following components are warranted for life to the original owner, subject to proof of purchase: SRP-N(P).

BASIC WARRANTY

Woodbridge Fireplace Inc. warrants the components and materials in your appliance to be free from manufacturing and material defects for a period of two years from date of installation. After installation, if any of the components manufactured by Woodbridge Fireplace in the appliance are found to be defective in materials or workmanship, Woodbridge Fireplace will, at its option, replace or repair the defective components at no charge to the original owner. Woodbridge Fireplace will also pay for reasonable labor cost incurred in replacing or repairing such components for a period of two years from date of installation. Any products presented for warranty repair must be accompanied by a dated proof of purchase.

This Limited Lifetime Warranty will be void if the appliance is not installed by a qualified installer in accordance with installation instructions. The Limited Lifetime Warranty will also be void if the appliance is not operated and maintained according to the operating instructions supplied with the appliance, and does not extend to (1) firepit burner assembly damaged by accident, neglet, misuse, abuse, alterations, negligence of others, including the installation thereof by unqualified installers, (2) the costs of removal, reinstallation or transportation of defective parts on the appliance, or (3) indentical or consequential damage. All service work must be performed by an authorized service representative.

This warranty is expressly in lieu of other warranties, express or implied, including the warranty of merchantability of fitness for purpose and of all other obligations or liabilities. Woodbridge Fireplace does not assume for it any other obligations or liabilities in connection with sale or use of the appliance. In states that do not allow limitations on how long an implied warranty lasts, or do not allow exclusion of indirect damage, those limitations of exclusions may not apply to you. You may also have additional right not covered in the Limited Lifetime Warranty. Woodbridge Fireplace reserves the right to investigate any and all the claims against this Warranty and decide upon method of settlement. For information about this warranty contact:

Woodbridge Fireplace Inc.
18A Strathearn Ave., Units #25-26
Brampton, L6T 4X7
CANADA

Rev. 1/2015